HÖRMANN

COMMERCIAL DOOR OVERVIEW

For Life. For Life. For Life. For Life.
For Life. For Life. For Life. For Life.
For Life. For Life. For Life. For Life.

The Industry Leader in Innovative Door Safety, Insulation, and Strength

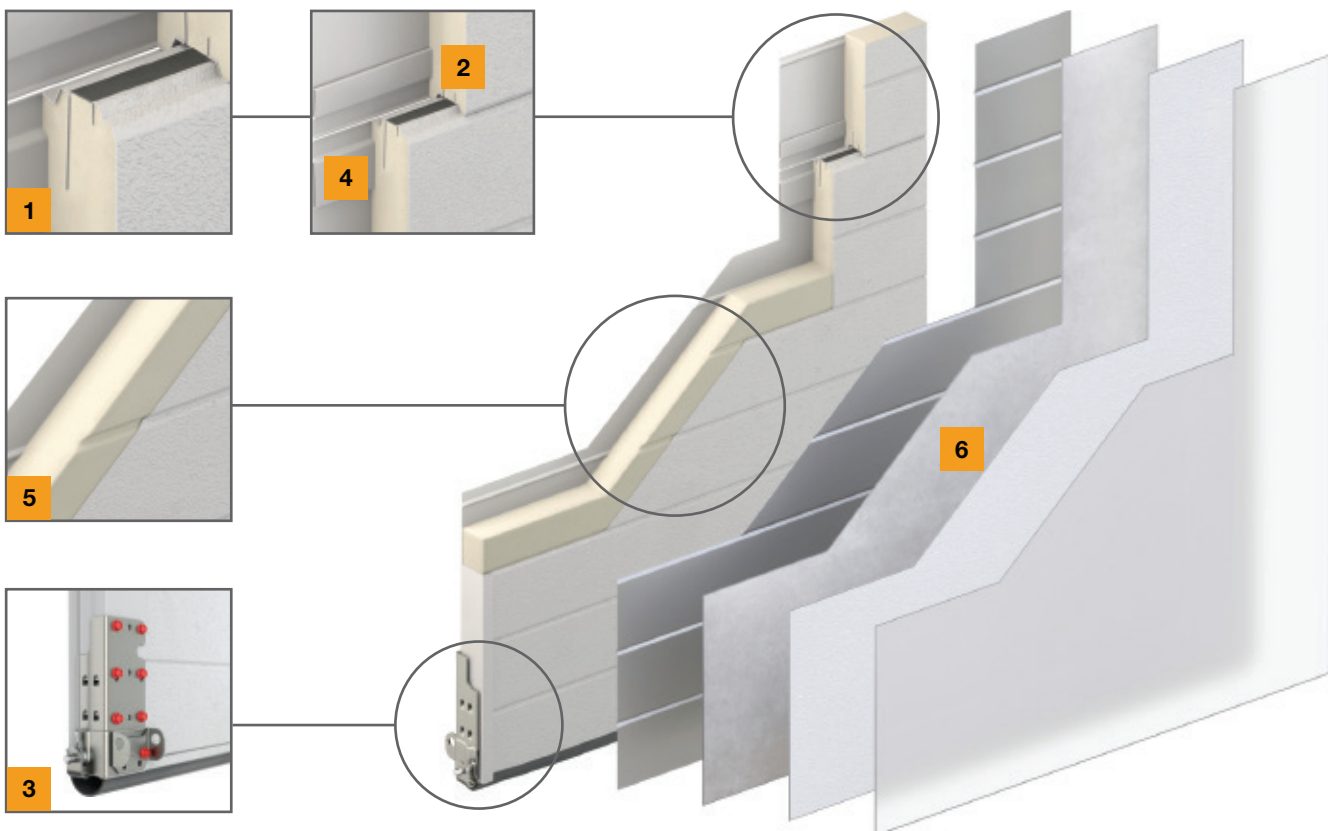

Precise Thermal Break 1

Increased thermal efficiency is achieved by our conduction-resistant thermal break.

Insulated Tongue & Groove 2

Our joints are sealed with insulating foam and joint tape to reduce air flow heat loss.

Proprietary Safety Brackets 3

Our reinforced safety bottom brackets and red safety screws create a double layer of built-in safety for the user.

Reinforced Mounting Steel 4

Triple-reinforced steel fold extends across the entire section for robust hardware mounting. An internal steel layer creates additional stability.

Proprietary Urethane Blend 5

Perfected over generations, our precisely engineered polyurethane outperforms its competitors in strength, energy efficiency, and density every time.

25 Gauge Steel 6

Our top-of-the-line 25 gauge steel is treated with 4 layers of strength and weather resistance.

Durable and Long-Lasting

NEW

450U - 2” Sections

BEST

Door: 10 yr | Hardware: 1 yr | Springs: 1 yr

THERMAL RATING

U 0.15 | R 18.4 | Note: A lower U-Factor number indicates a higher efficiency

- Steel Front and Back
- 5 Colors + Custom Color
- 2” Sections
- 3 Window Options

Thermal Rating	■■■■■
Durability	■■■■□
Low Maintenance	■■■■□

PANEL DESIGN OPTIONS

1 Microgroove

2 Flush

COLOR OPTIONS

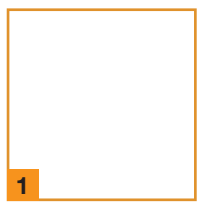

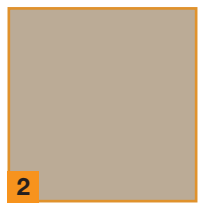









1 White
2 Sandstone
3 Mocha Brown
4 Black

5 Metallic Silver (Optional)
6 Galaxy Paint (Optional Custom Color)

NOTE: Metallic Silver color selection comes with an upcharge based on square footage of the door.



Commercial Polyurethane Products

Steel Doors

Precision-Engineered and Second to None

NEW

440U - 1-1/2” Sections

BEST

Door: 10 yr | Hardware: 1 yr | Springs: 1 yr

THERMAL RATING

U 0.21 | R 15.7

Note: A lower U-Factor number indicates a higher efficiency

- Steel Front and Back
- 5 Colors + Custom Color
- 1-1/2” Sections
- 3 Window Options

Thermal Rating	■■■■■
Durability	■■■■□
Low Maintenance	■■■■□

PANEL DESIGN OPTIONS

1 Microgroove

2 Flush

COLOR OPTIONS

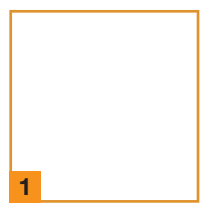

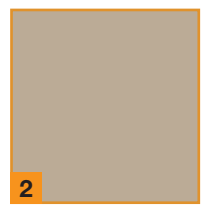









1 White
2 Sandstone
3 Mocha Brown
4 Black

5 Metallic Silver (Optional)
6 Galaxy Paint (Optional Custom Color)

NOTE: Metallic Silver color selection comes with an upcharge based on square footage of the door.



Solid Steel Durability and Low Maintenance

340S / 350S / 354S

BETTER

Door: 10 yr | Hardware: 1 yr | Springs: 1 yr

THERMAL RATING

U 0.29 (340S)
0.21 (350S / 354S)

R 9.0 (340S)
10.4 (350S / 354S)

- Steel Front and Back
- 1½" (340S) or 2" (350S / 354S)
- 3 Window Designs
- 3 Standard + 2 Optional Colors
- CFC Free Polystyrene Insulation

Thermal Rating	
Durability	
Low Maintenance	

340S, 350S and 354S panels are all available with wood-grain embossment in flush design.

340S, 350S and 354S panels are all available with wood-grain embossment in micro-groove design.



340S and 350S panels are available with woodgrain embossment in short raised panel deisgn in certain configurations.

COLOR OPTIONS

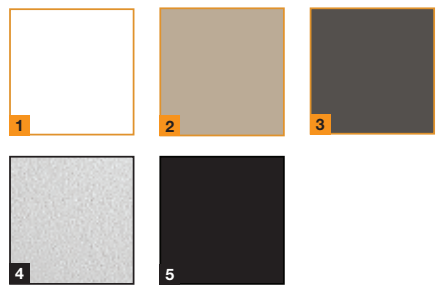

1 White
2 Sandstone
3 Mocha Brown

4 Metallic Silver (Optional) (340S and 350S)
5 Black (340S and 350S)

NOTE: Metallic Silver color selection comes with an upcharge based on square footage of the door.



Uncompromised and Cost-Effective

250P / 254P / 255P - 2” Sections

VALUE

Door: 10 yr | Hardware: 1 yr | Springs: 1 yr

- **R-7.4** w/ opt. Insulation
- Steel (25, 24, & 20 gauge)
- 2” Sections
- White (all models) or Brown (255P & 254P)
- 3 Window Options
- 2 Panel Designs

Thermal Rating	
Durability	
Low Maintenance	



255P panels are also produced in woodgrain texture for short raised panel design in White or Mocha Brown color.

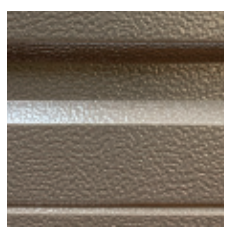

255P panels are produced in deep ribbed design and stucco texture surface in White or Mocha Brown color.



250P and 254P panels are produced in deep ribbed design smooth texture surface in white. The 254P is also available in Mocha Brown color.



German-Engineered and Made in the USA

224P / 225P

VALUE

Door: 10 yr | Hardware: 1 yr | Springs: 1 yr

- **R-7.4** w/ opt. insulation
- Steel (24 ga. or 25 ga.)
- 2” Sections
- 3 Colors
- 3 Window Options
- 3 Panel Designs



324S / 325S

BETTER

Door: 10 yr | Hardware: 1 yr | Springs: 1 yr

- **R-8.9**
- Steel Front and Back
- 2” Sections
- 3 Colors
- 3 Window Options
- 3 Panel Designs



425U

BEST

Door: 10 yr | Hardware: 1 yr | Springs: 1 yr

- **R-16.1**
- Steel Front and Back
- 1-3/4” Sections
- White + Galaxy Paint
- 3 Window Options
- Ribbed or Smooth Flush



720A

BEST

Door: 10 yr | Hardware: 1 yr | Springs: 1 yr

- Anodized Aluminum
- 1-3/4” Sections
- Clear Anodized + Galaxy Paint
- 3 Window Options
- 5 Glass Options



HPP Impact Traffic Doors

Durable and hygienic doors for an array of applications

Hörmann High Performance Polyethylene (HPP) double-action doors are made from heavy-duty polyethylene PE 500 material which is impact and crack-resistant. Unlike others, we do not use foam-filled panels, which weaken the door panel. When combined with our special impact-resistant stainless steel hinges, our HPP doors can withstand years of wear and tear, even when subjected to extremely high stress forklift impacts. Hörmann double-action doors are impervious to moisture, resistant to acids and alkalis, and meet the most stringent hygiene standards. They are ideal for use in cold temperatures, washdown applications, and food production environments. This material is USDA / FDA / EU compliant with a ten year panel warranty and a one year warranty on all other components.

Colors

Designs to match your facility

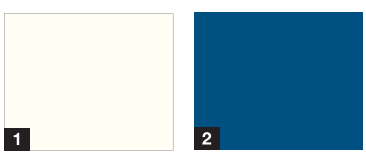

2 Standard Colors

1 RAL 9010 Pure White

2 RAL 5010 Gentian Blue

A wide variety of additional colors are available via special order!



Window Options

Selections to suit your needs

Glazing Options HPP Impact Traffic Doors

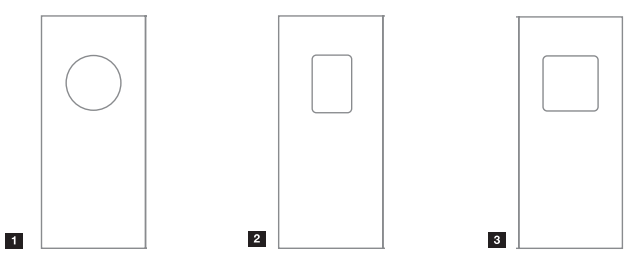

Windows / Glazing

The glazing is made of 0.60" thick acrylic glass, which is embedded flush with the door panel.

You can choose between frameless glazing and optional glazing with a stainless steel frame.

Window Sizes and Shapes

3 sizes and shapes are available without frames as standard:

- 16" diameter round 1
- 16" × 24" rectangular (with rounded corners) 2
- 24" x 24" square (optional) 3

For door widths smaller than 28", the glazing is narrower than specified above. The window center is 60" high as standard, but customized adjustments are also available.

Stainless Steel Glazing Frame (optional)

The following sizes and shapes are available as options:

- 16" × 24" rectangular
- 24" × 24" square

Other formats are available on request.

Innovative Hinge Design

HPP (High Performance Polyethylene Panel) Impact Traffic Door Hinge

One Million Cycles

Impact Resistant

Spring Protection

Hörmann Innovations
Premium Stainless Steel Adjustable Hinges


1


2


3

Durable stainless steel hinges

Hörmann HPP Impact Traffic doors are equipped as standard with hinges in AISI 304 stainless steel 1 which is a highly durable and rust-resistant steel, making the hinge maintenance-free and particularly robust. The narrow hinge design enables the widest possible passage width. The spring is encapsulated with a stainless steel housing to protect it from damage. 2
These are also zero-rise hinges, which reduce gaps between the door edge and the lintel. The stainless steel hinge is available with or without a 90° door position holding device. With this device, the door panel remains open when engaged and swings back again with a gentle tap.

Highly adjustable spring tension

Depending on your needs, the swing action of the door can be made slower or faster by simply tightening or loosening the nuts. 3

Hinges and all other fasteners are **stainless steel AISI 304**; **springs in AISI 301 stainless steel**. **Optional AISI 316 hardware** is available for heavy washdown and corrosive applications.


HPP-180 shown here

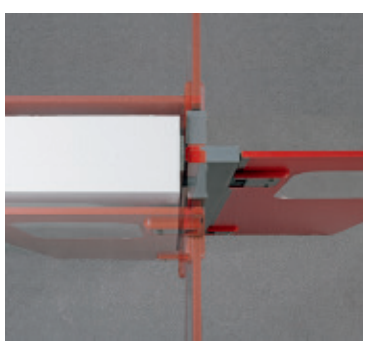

The HPP-180 has capability of opening 180°. The optional HPP-360 can be opened 360° on both sides in order to keep access routes clear and can be locked in a total of 5 positions.

Integrated stops enable the optional HPP-360 door to be held in the following opening angles:

- 0°
- 90° to the left
- 90° to the right
- 180° to the left
- 180° to the right


HPP-360 (optional) shown here

Stainless Steel Frames

Frames are **included** and are pre-assembled to your door for easy installation

We supply 4 convenient types of mounting frames (all in 304 stainless steel or **optional** 316 stainless steel) to meet any site configuration such as drywall, steel frame jambs and insulated walls.

Key Features and Benefits

- All frames are made of stainless steel
- Durable even under varying temperatures and harsh climates
- Hygienic stainless steel is USDA and FDA compliant
- Prefabricated design provides for more efficient installation

Stainless Steel Frame Mounting Options

1. Stainless steel mounting plate
2. Stainless steel flat profile
3. Stainless steel profile frame
4. Block frame in front of the wall

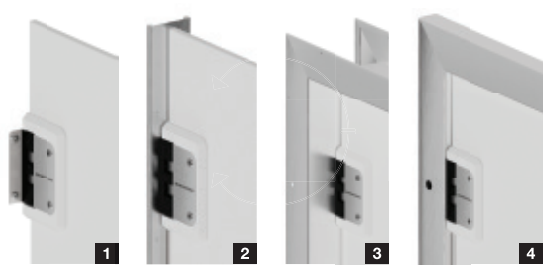
1 2 3 4

Frame mounting according to wall type

	Option 1	Option 2	Option 3	Option 4
Masonry / Concrete	●	●	●	●
Existing Frame	●	●	●	●
Drywall, reinforced	●	●	●	●
Drywall, not reinforced	-	-	●	●
Insulated panels	-	-	●	●

● = Available – = Not available

The World Leader in Loading Technology

Hörmann hydraulic dock levelers are designed with sturdy structural bases to bridge the gap between truck loading surfaces and the loading platform, making the loading process faster and preventing damage to the transported goods.

HYDRAULIC DOCK LEVELERS HINGE LIP - MODEL: HLS-2

1. STRONGLY CONSTRUCTED DOCK LEVELER PLATFORM
2. STURDY LIP
3. MADE TO WITHSTAND TOUGH ENVIRONMENTS
4. RELIABLE DOUBLE CYLINDER HYDRAULIC SYSTEM

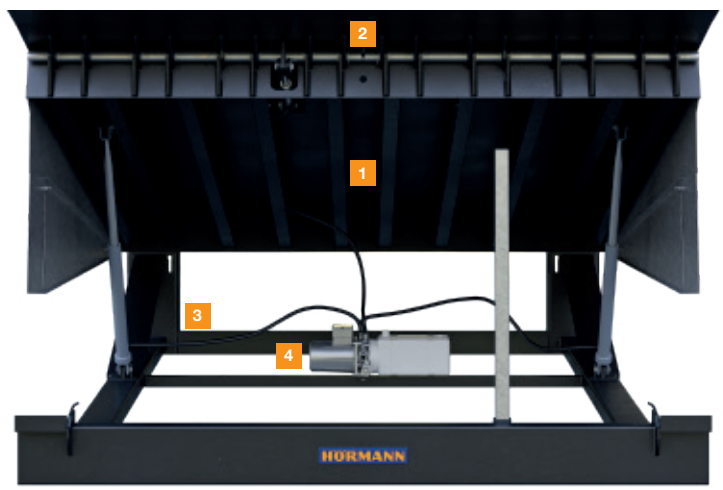

Model	Nominal Width	Nominal Length	Static Load Capacity		Pit Height
			Standard	Optional	
HLS-2 68	6’	8’	35,000	50,000	20” Front 19½” Rear
HLS-2 78	7’	8’	35,000	50,000	20” Front 19½” Rear
HLS-2 610	6’	10’	35,000	50,000	20” Front 19½” Rear
HLS-2 710	7’	10’	35,000	50,000	20” Front 19½” Rear

Controls



AVAILABLE DOCK LEVELER CONTROLS

DLC-B11	BASIC 1PH 120V
DLC-B13	BASIC 1PH 230V
DLC-B32	BASIC 3PH 208V
DLC-B33	BASIC 3PH 230V
DLC-B34	BASIC 3PH 460V
DLC-A11	ADVANCED 1PH 120V
DLC-A13	ADVANCED 1PH 230V
DLC-A32	ADVANCED 3PH 208V
DLC-A33	ADVANCED 3PH 230V
DLC-A34	ADVANCED 3PH 460V

Hydraulic Dock Levelers with Hinged Lip

HLS 2 with hinged lip

Note:
The values indicate the difference in height, which, taking into account the maximum gradient / inclination according to ANSI-MH-30-1-2022 can be bridged by a maximum of 12.5%. The technically possible range is considerably larger depending on the dock leveler length. Note that these are limit values. Preferably select the next higher length size. Plan the dock height so that the height difference to the truck loading surface is as small as possible.

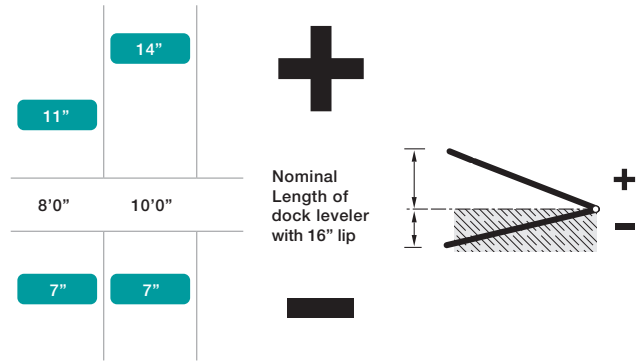

LIP LENGTHS

Select a lip length so the contact surface is at least 4 to 6 inches in accordance with ANSI-MH-30-1-20222 (maximum 6 inches is possible).

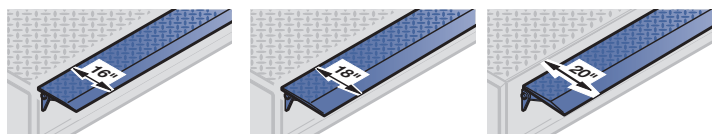

TYPE R, STRAIGHT 1

Standard for 6 ft wide platforms.

TYPE S, TAPERED LIP 2

Standard for 7 ft wide platform

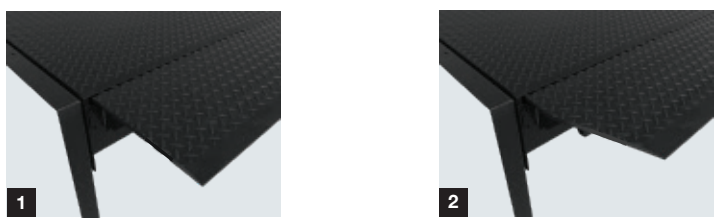

MECHANICAL EDGE OF DOCK LEVELER MODEL MRS-V

1. DOCK LEVELER PLATFORM
2. ROBUST HINGED LIP
3. MADE TO WITHSTAND TOUGH ENVIRONMENTS
4. SIMPLE OPERATION
5. GAS SPRING SUPPORT
6. CORROSION PROTECTION
7. STEEL BUMPERS
8. TOE GUARDS

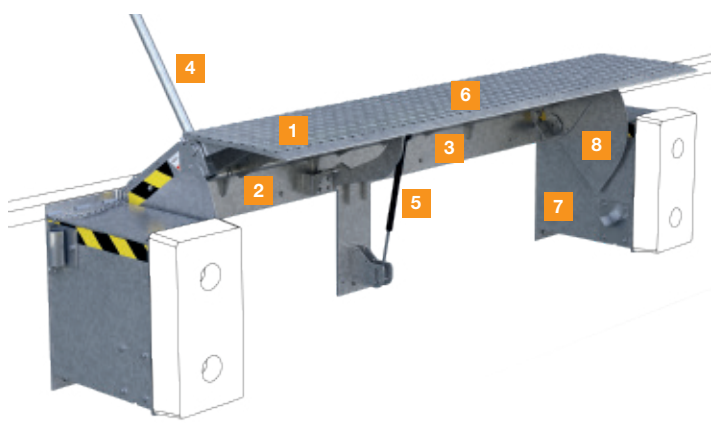

SHELTERS & SEALS

Protect goods and personnel against adverse weather effects, save energy costs, and increase efficiency with dock shelters and seals. Various models available to best suit your needs.



DID YOU KNOW ?

1 ALL YOU NEED IS ONE MANUFACTURER FOR DOORS AND DOCKS.

From the edge of your dock and throughout your building, Hörmann is THE one-stop-shop for all your door and dock needs! We have the latest door technology available for any commercial, residential, or high-performance door project, and add in our comprehensive bundle of loading dock equipment for complete coverage from one source.

Precision and Speed - Perfect for a Vast Array of Applications

Speed-Guardian™ Series



HIGH-SPEED MODERN, EFFICIENT, AND RELIABLE HIGH PERFORMANCE DOORS

The fast opening and closing speeds of high-speed rigid doors optimize work processes and significantly accelerate logistics processes. Depending on the door model, powder-coated RAL 9006, double-skinned sections are guided into a circular or into horizontal or vertical tracks. The sturdy steel sections of the doors have thermal breaks and are PU-foamed. As a result, you benefit from excellent thermal values: R-value of 13.6 and U-factor of 1.04 which minimizes energy loss.

STANDARD FEATURES

- For interior or exterior applications
- Opening speed up to 80 IPS / closing 30 IPS
- 100s of custom RAL color paint options
- Optional: Vision slats – Three styles of vision slats are available: clear, perforated or tinted
- Light curtain built into guide tracks automatically reverses the door if beams are interrupted
- Hood: Optional: Galvanized steel. (N/A on LH model)
- Emergency opening: Chain hoist.

Steel Ranger™ Series

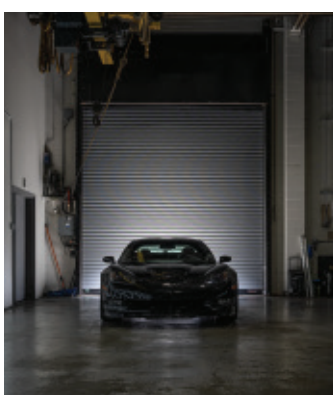

THE HIGH-PERFORMANCE, SECURE, AND SUPERIOR SOLUTION FOR ROLLING STEEL

The Steel Ranger™ Series of high performance rolling steel doors is the perfect replacement for old fashioned rolling steel doors . The panel color matches our standard Speed-Guardian™ 5000 Series RAL 9006, which makes it easy to coordinate the two products into one building design. With a rapid opening speed of 45” per second, the Steel Ranger™ 9000 L Elite and 9000 LH models open up to 5-1/2 times faster than a traditional rolling steel door. This contributes to energy savings and reduced employee wait times, ultimately saving money.

STANDARD FEATURES

- Exclusive Decotherm steel panels
- Built-in light curtain automatically reverses the door
- Direct-drive, springless design
- Unbeatable 5 & 2 warranty
- Compact aluminum guide tracks that require sideroom of only 4” for all door sizes
- Optional galvanized hood for weather protection
- Emergency opening: Chain hoist.

HD Series Rubber Doors



TOUGH AND RELIABLE IN EVEN THE MOST DEMANDING ENVIRONMENTS

Each Hörmann rubber door solution is custom built. Our rubber doors’ unique product capabilities have revolutionized the door industry by providing a more reliable, more durable, longer lasting performance with greater impactability. These doors will substantially reduce your long-term cost of ownership and provide the lowest life cycle cost available. We provide the industry’s most reliable and durable door systems. Depending on the application, the typical return on investment is 12-36 months becuase of the low-maintenance and robust design.

STANDARD FEATURES

- Galvanized steel mounting angles
- NEWGEN® aluminum guides with integrated light curtain
- Patented pivoting aluminum bottom bar for easy reset after an impact
- Lifetime curtain warranty
- Low maintenance drive system with variable frequency drive (manual chain model also available)
- Springless design enables us to include our unbeatable 5 and 2 warranty

High-Performance Doors

Fabric and Freezer Model

Perfect for Food and Beverage, Manufacturing, and Other Demanding Environments

Speed-Commander™ Series



PERFECT FOR INTERIOR DOORWAYS, CLEAN ROOMS, COOLERS AND FOOD PROCESSING

Fabric high performance doors speed up workflow and reduce energy costs. Our doors have been designed with protection features that promote efficiency and sustainability. Our SC series features easy installation and minimal maintenance. Based on our expert know-how, we develop customer-specific solutions for special applications such as, the food industry, clean rooms, coolers, or for conveyer systems and machine protection.

STANDARD FEATURES

- For interior applications only
- Maximum opening speed 80 IPS / closing 30 IPS
- Full-width vision area provides maximum visibility
- Breakaway SoftEdge (N/A on Machine Protection model) Optional: Aluminum bottom bar with breakaway tabs for certain applications
- Guide tracks: 6" w x 3-1/4" projection 12 ga. galvanized steel. Optional: Stainless steel
- Light curtain built into guide tracks automatically reverses the door if beams are interrupted
- Hood: Optional: Galvanized or Stainless steel
- Control box: Smart Start™ NXT NEMA 4X

Speed-Master® Series



FABRIC HIGH PERFORMANCE DOORS FOR INTERIOR OR EXTERIOR DOORWAYS

The legendary Speed-Master® Series by Hörmann High Performance Doors has been installed in demanding manufacturing and industrial applications for over 30 years. The rugged sectional panel, compact footprint and direct-drive motor contribute to the operational simplicity and reliable performance for which the Speed-Master® is known. Various demands require individual door solutions. We have a Speed-Master® high performance fabric door solution for any special application.

STANDARD FEATURES

- For interior or exterior applications
- Sectional panel design
- Full-width vision area(s) provides maximum visibility
- Breakaway bottom edge
- Light curtain built into guide tracks automatically reverses the door if beams are interrupted
- Hood: Optional - Galvanized steel or optional: Stainless steel.
- Emergency opening: Standard: Chain hoist.

CHILLFAST Freezer Door



ENERGY SAVING OPERATION FOR FOOD / BEVERAGE & COLD STORAGE

Slow-moving freezer doors can slow down operations. Streamline everyday processes and maximize profits with the CHILLFAST high speed freezer door, which incorporates well into fast-paced food, beverage and cold storage applications. Our high-performance CHILLFAST door is suitable for applications up to 13'0" wide X 18'6" high. It is finely crafted using an insulated panel and durable components. With an opening speed of up to 95 inches per second, this door is fast, durable, and completely reliable.

STANDARD FEATURES

- Insulated reinforced vinyl curtain endures cold temperatures
- Soft bottom with safety edge releases upon impact & automatically resets
- Heated aluminum guide tracks with integrated photo eyes, wear strips and fabric loop seals
- Aluminum roll and operator hood/cover with attractive white finish
- GFCI protected heater cable system
- Plug-and-play electrical connections reduce installation time
- Optional air curtain system (heated or non-heated)

Residential Doors - Unmatched Quality

Traditional Designs



A VAST ARRAY OF CUSTOMIZATIONS AND SUPERIOR VALUE

From extremely cost-effective pan products to highly-insulated polyurethane doors, Hörmann presents you with options that meet both your budget and your design criteria. Choose from standard Tongue and Groove or our top-of-the-line European engineered deep Tongue and Groove for every door series.

AVAILABLE MODELS

- Clima Tech 4400 - 1½" Polyurethane Insulated
- Therma Tech 3400 - 1½" Polystyrene Insulated
- Therma Safe 3200 - 2" Polystyrene Insulated
- Pro Tech 2500 - 2" Pan Door with Optional Insulation
- Pro Safe 2100 - 2" Pan Door with Optional Insulation

Contemporary Designs



MODERN DESIGN ELEMENTS WITH HÖRMANN'S ELITE ENGINEERING

For tough and architecturally refined products that instantly boost curb appeal, we have the answer. We make it possible to have a garage door that's high quality, beautiful, and virtually maintenance-free. Choose from an expansive selection of panel designs and window options to match your personal taste. You can easily customize a garage door for a contemporary trendsetting look you're going to love.

- Modern Classic 7500 - 2" Aluminum Full View
- Luma Classic 7400 -
- Classic Safe 7200 - 1¾" Aluminum Full View
- Modern Tech 3550 - 2" Smooth Steel

Carriage Designs



ELEGANT AND LUXURIOUS CARRIAGE HOUSE STYLE DOORS

Choose from elegant carriage-house style doors constructed using our latest manufacturing technology that combine a modern, maintenance-free aluminum garage door with the sophisticated appearance of natural wood, or the timeless style of a classic carriage style door made with traditional, durable steel construction.

- Infinity Classic 7800 - 2" Aluminum
- Clima Elite 5800 - 2" (1½" Steel with Polyurethane Insulation and ½" Extira Overlays)
- Therma Style 5500 - 2" Steel Polystyrene Insulated
- Deco Safe 5250 - 2" Steel Polystyrene Insulated
- Style Safe 5200 - 2" Steel Polystyrene Insulated

HÖRMANN NORTH AMERICA



Sparta, TN - North American Headquarters / Sectional Doors

SIX PRODUCTION PLANTS, ONE FAMILY

As one of the world's leading manufacturers of door and dock systems, we're committed to providing the best quality, value, and selection. Whether residential, commercial or industrial, we have the solutions you're looking for. Each Hörmann product gives you the perfect array of benefits and options to satisfy your customers.



Puyallup, WA



Montgomery, IL



Oro-Medonte, ON Canada



Burgettstown, PA



Imperial, PA

USA
Toll Free: 800.365.3667
Email: info@hormann.us
Website: hormann.us

Canada
Toll Free: 866.792.9968
Email: info@hormann.ca
Website: hormann.ca

Mexico
Toll Free: 52 (81) 8308 7481
Email: info@hormann.com.mx
Website: hormann.mx

Member of DASMA Door & Access Systems Manufacturers Association International

IDA International Door Association

IARW International Association of Refrigerated Warehouses

A Core Partner of GLOBAL COLD CHAIN ALLIANCE®

IPMI International Parking & Mobility Institute

FPSA Food Processing Suppliers Association

PDA Professional Door Association of NEW ENGLAND

NBWA

BOMA International

USGBC MEMBER

AIA Continuing Education Provider

AVAILABLE FROM:

PN 27779871

Follow us on social media

HÖRMANN

We reserve the right to change specifications without notice. ©Hörmann (Issue 11.2026)